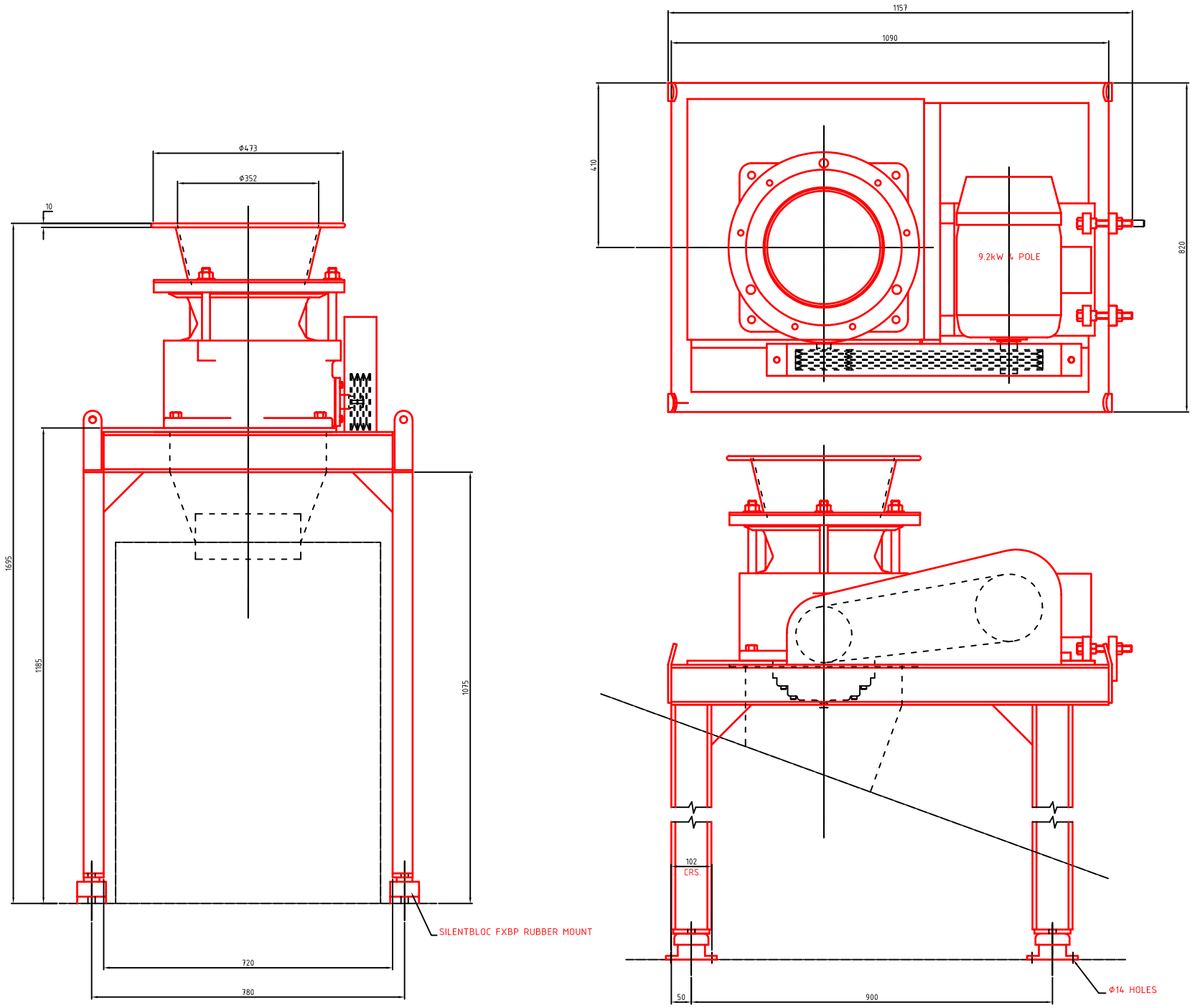

REV	DATE	REVISION	BY	CHK
1				
0	23/04/09	ISSUED FOR MANUFACTURE	T.R.F.	T.R.F.

	NAME	DATE
DESIGNED	J.A.B.	09/05
DRAWN	T.R.F.	22/04/09
CHECKED		
APPROVED		

IMPORTANT COPYRIGHT
THIS DRAWING MUST NOT BE USED IN ANY WAY DETRIMENTAL TO OR REPRODUCED OR COPIED WITHOUT PERMISSION OF THIS GROUP

WESCONE DISTRIBUTION PTY LTD
13 Sevenoaks Street, Bentley
Western Australia 6102
Telephone (08)9350 6881
Facsimilie (08)9350 6878

WESCONE 300 SERIES 2
PIONEER ROAD SERVICES
CRUSHER & MOUNTING FRAME ARRANGEMENT

CLIENT
DRG. No

SCALE 1:5
DRAWING No. 03051141

SHEET SIZE A1